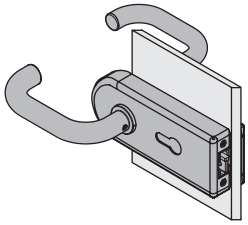

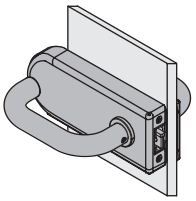

981.49.500	981.49.511	981.49.530
981.49.501	981.49.512	981.49.531
981.49.502	981.49.513	981.49.532
981.49.503	981.49.514	981.49.533
981.49.504	981.49.515	981.49.534
981.49.505	981.49.520	981.49.535
981.49.510	981.49.521	

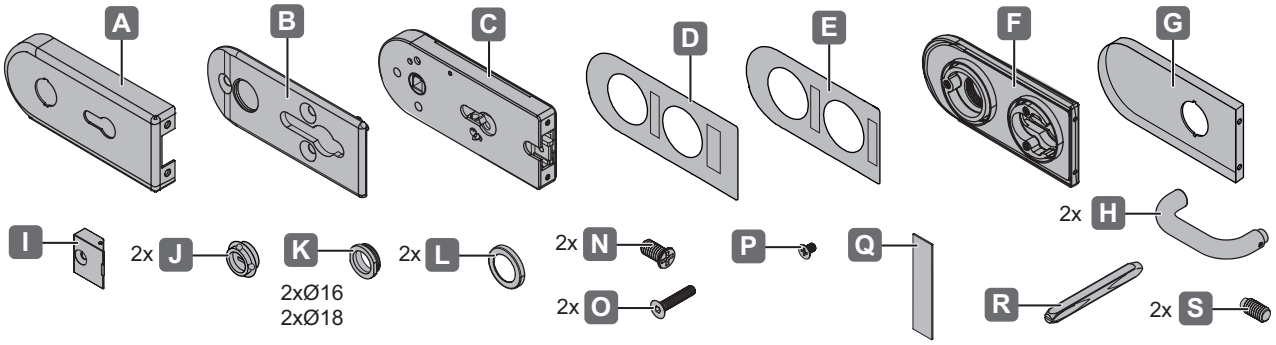

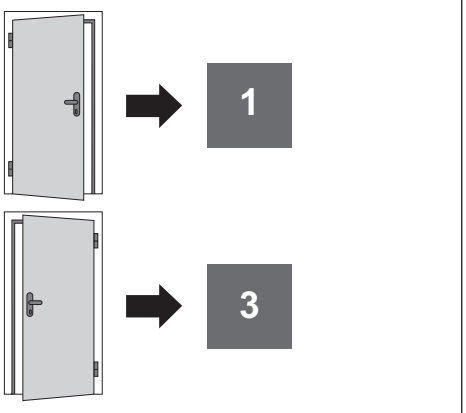

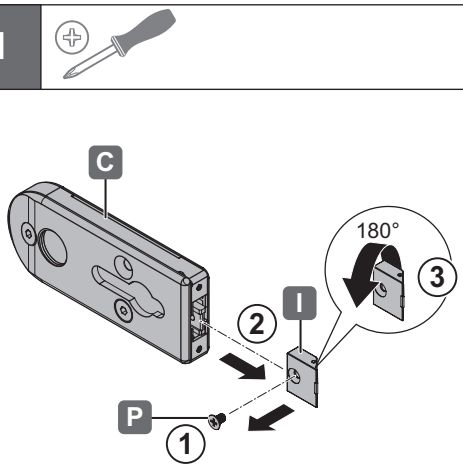

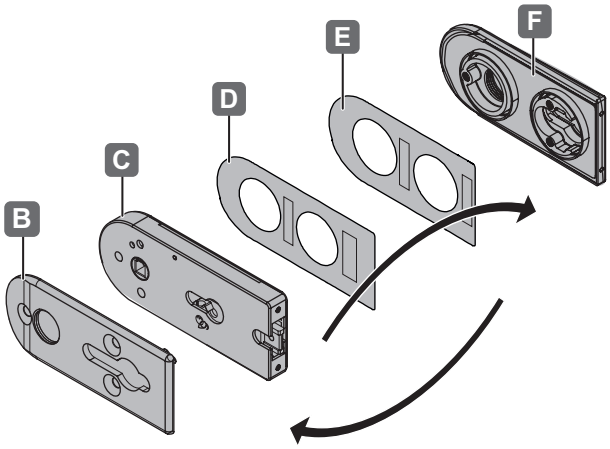

732.29.980

HDE 21.09.2020

3

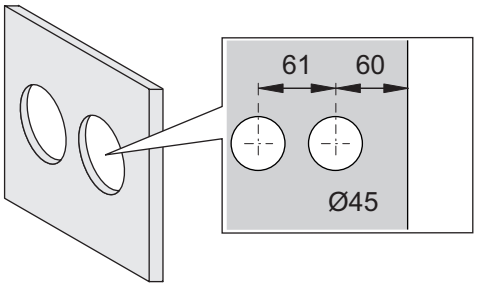

4

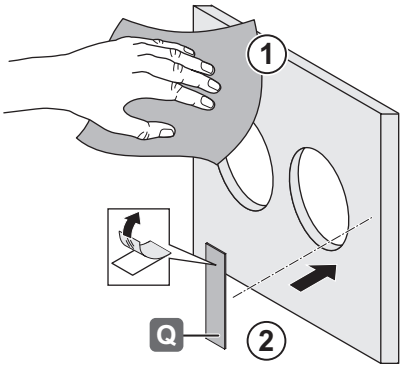

5

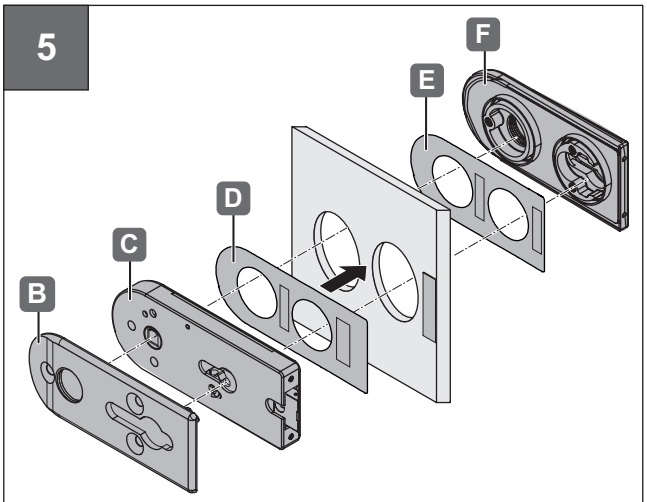

6

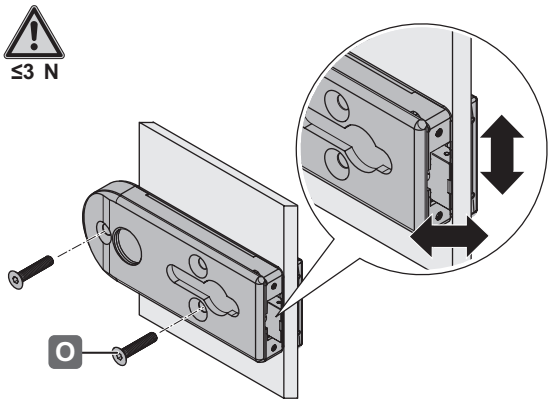

7

SW 2,5

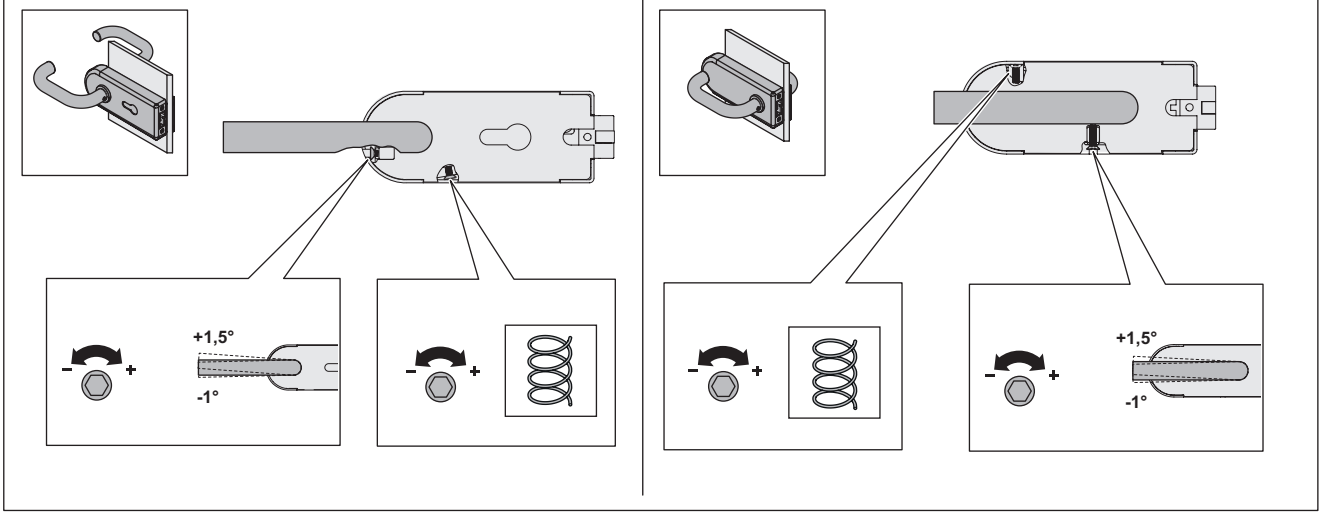

732.29.980

HDE 21.09.2020

8

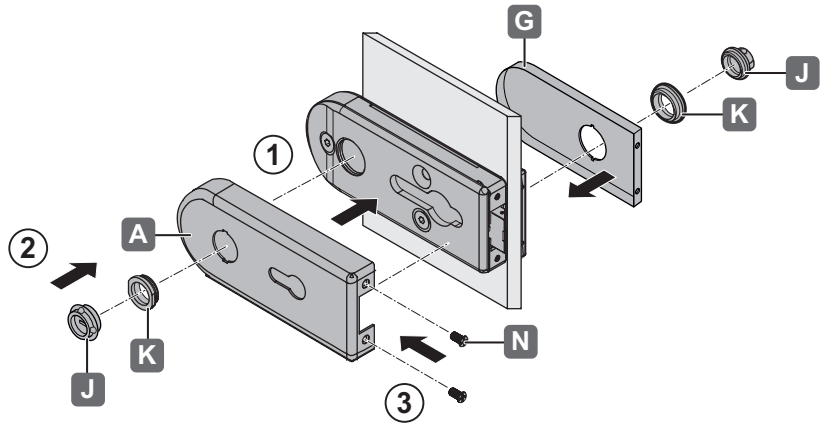

9

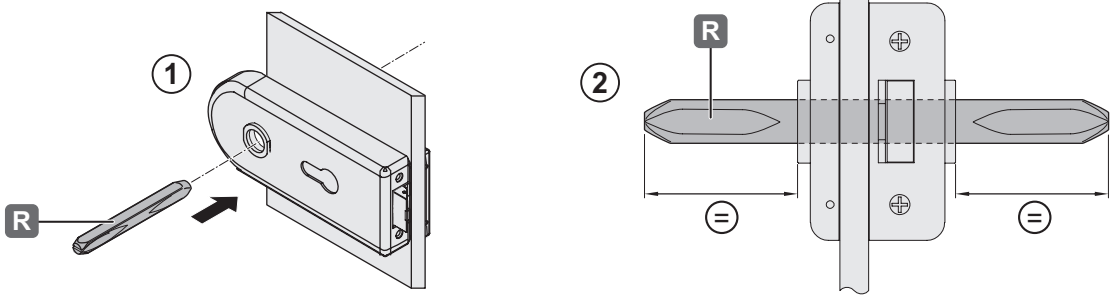

10

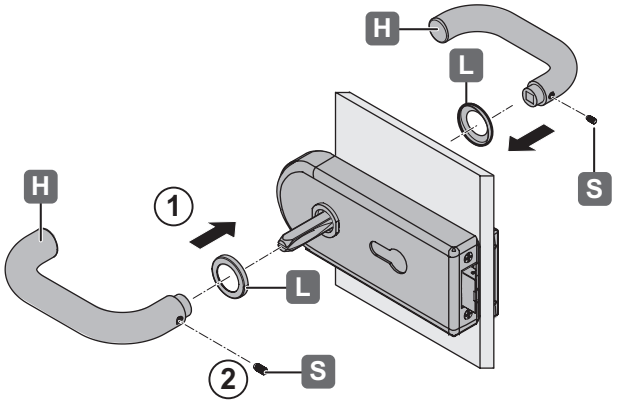

i

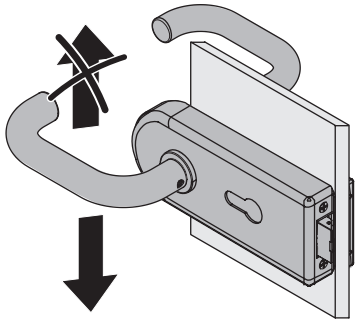

732.29.980

HDE 21.09.2020

Subject to alteration

© 2020 by Häfele GmbH & Co KG
Adolf-Häfele-Str. 1 · D-72202 Nagold www.hafele.com